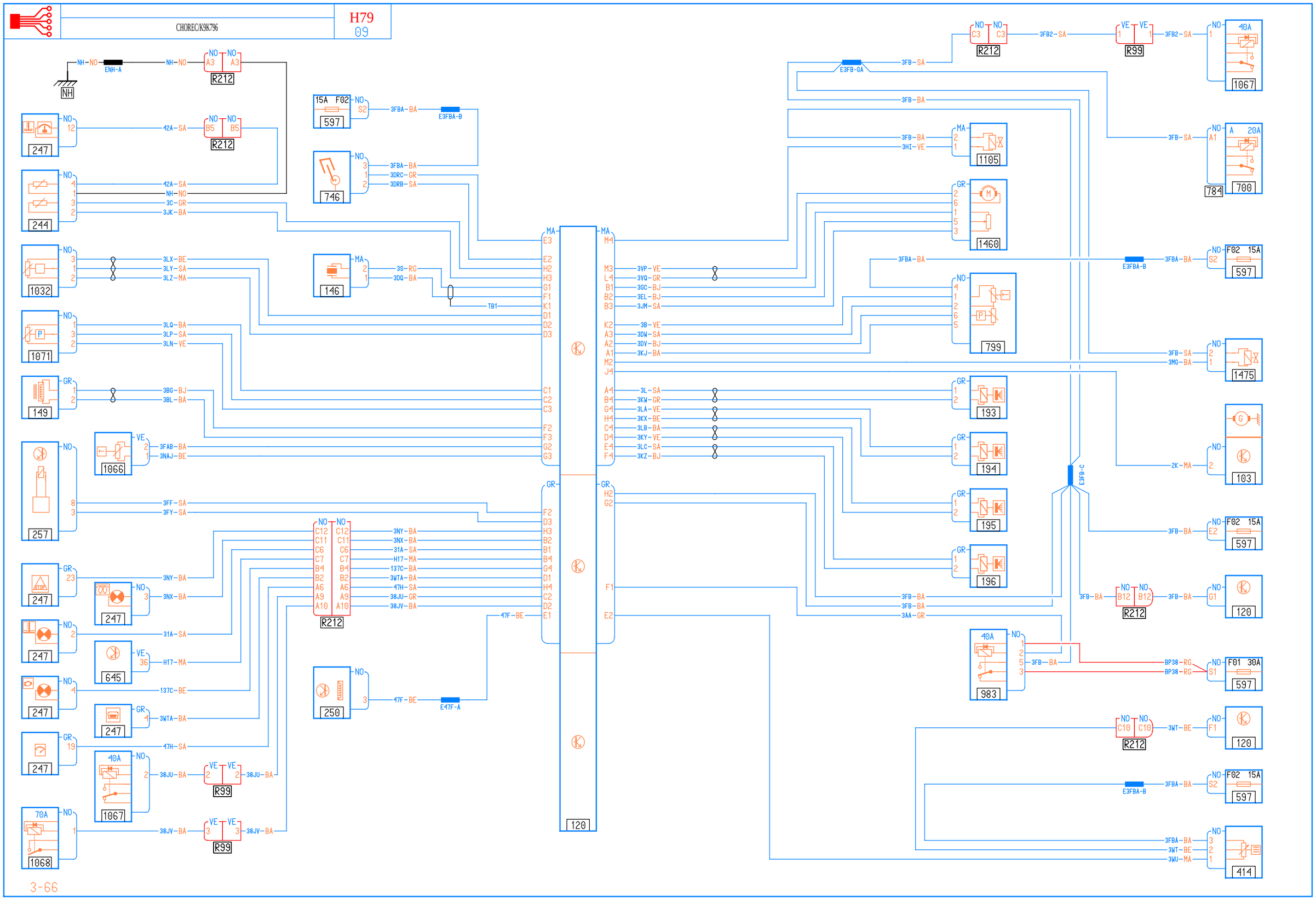
NH
ENH-A
R212
247
42A-SA
244
3C-GR
3JK-BA
1032
3LX-BE
3LY-SA
3LZ-MA
1071
3LQ-BA
3LP-SA
3LN-VE
149
3BG-BJ
3BL-BA
1066
3FAB-BA
3NAJ-BE
257
3FF-SA
3FY-SA
3NY-BA
3NX-BA
31A-SA
645
H17-MA
137C-BE
3WTA-BA
47H-SA
1067
38JU-BA
R99
1068
38JV-BA
597
3FBA-BA
E3FBA-B
746
3DRC-GR
3DRB-SA
146
3S-RG
3DQ-BA
TB1
R212
250
47F-BE
E47F-A
120
E3FB-GA
3FB-SA
R212
R99
1067
3FB2-SA
40A
1105
3FB-BA
3HI-VE
1460
3VP-VE
3VQ-GR
3GC-BJ
3EL-BJ
3JM-SA
799
3B-VE
3DW-SA
3DV-BJ
3KJ-BA
193
3L-SA
3KW-GR
3LA-VE
3KX-BE
3LB-BA
3KY-VE
3LC-SA
3KZ-BJ
194
195
196
3AA-GR
983
BP38-RG
1475
3MG-BA
2K-MA
103
E3FB-C
120
F01 30A
3WT-BE
414
3WU-MA
784
700